DRAWING SIZE D

ZONE	LTR	REVISIONS DESCRIPTION	DATE (YR MO DA)	APPROVED
	G	REDRAWN WITH CHANGE ERR-29Z1272P (ECP G8S2061/890419)	900713	ORFI-KJS
	H	NOR GIS4527/920124	920226	RV
	J	NOR L1S2100 011116	011212	RLV

NOTES:

1. FINISH 63 EXCEPT AS NOTED.
2. BREAK EDGES .003 + .012 UNLESS OTHERWISE SPECIFIED.
3. HEAT TREATMENT: FOR 6150: HEAT AT 1550°-1600°F. OIL QUENCH. TEMPER 1 HOUR MINIMUM TO HARDNESS SPECIFIED. FOR 4340: HEAT AT 1500°-1550°F. OIL QUENCH. TEMPER 1 HOUR MINIMUM TO HARDNESS SPECIFIED.
4. FINAL PROTECTIVE FINISH: FINISH 5.3.1.2 OR 5.3.2.2 OF MIL-STD-171.
5. MIL-W-13855 AND ANSI Y14.5M-1982 APPLIES.
6. MATERIAL:- ALLOY STEEL, SHEET AND STRIP, ASTM A506, GRADES 6150, 4340, 4140; ALLOY STEEL, BARS, COLD FINISHED, ASTM A331, GRADES 6150, 4340, 4140. ALTERNATE MATERIALS:- ALLOY STEEL, BARS, HOT WROUGHT, ASTM A322, GRADES 6150, 4340, 4140; ALLOY STEEL, PLATES, ASTM A829, GRADES 6150, 4340, 4140; ALLOY STEEL, SHEET, STRIP, PLATE, AMS 6359 (GRADE 4340); ALLOY STEEL, SHEET, STRIP, PLATE, AMS 6395 (GRADE 4140); ALLOY STEEL, SHEET, STRIP, PLATE, AMS 6455 (GRADE 6150).

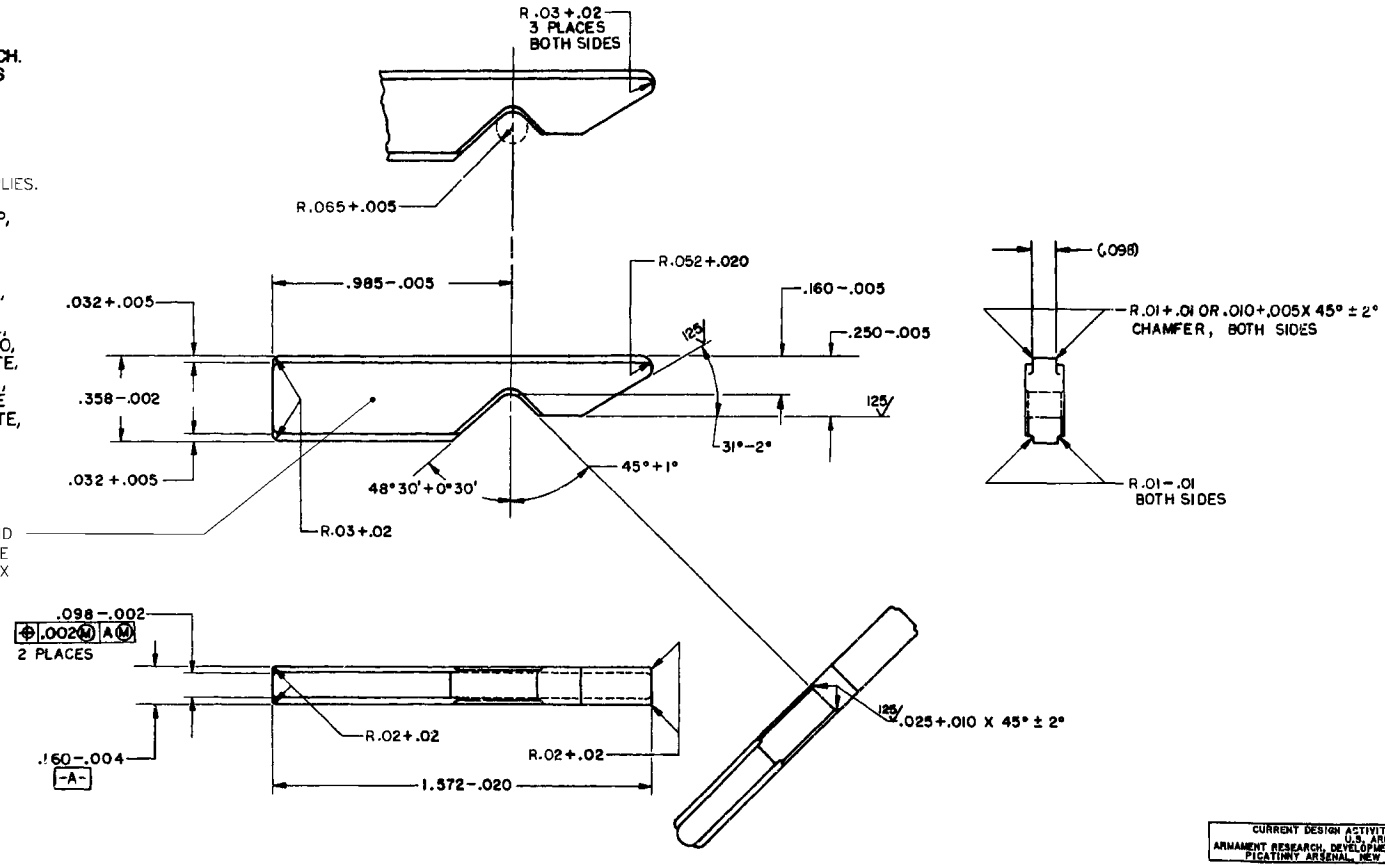

CURRENT DESIGN ACTIVITY CAGE CODE 19200
U.S. ARMY
ARMAMENT RESEARCH, DEVELOPMENT AND ENGINEERING CENTER
PICATINNY ARSENAL, NEW JERSEY 07806-5000

PART NO. 5351220

PMIC		GUN, ACFT,	DO NOT SCALE DRAWING	CONTRACT NUMBER
MECHANICAL PROPERTIES		CAL .50,	UNLESS OTHERWISE SPECIFIED DIMENSIONS ARE IN INCHES TOLERANCES ON DECIMAL FRACTION 2 PL ± ± 3 PL ± ANGLES ±	CONTRACTOR
YP		GAU-10/A		
TS		MG CAL .50:	THIRD ANGLE PROJECTION	DRAWN BY J.E.M. DATE 16 MAR 43
EL2		M2 HB FLEX,		CHECKER ENGINEER R.W.D.
RA	D6528322	FXD, TT;		SUBMITTED D.S.BUTTERWORTH
BH	D7312660	XM218,XM213		
RH C45-51	NEXT ASSY	USED ON	MATL ENGR	APPROVED A.A.COLE
	APPLICATION			

SPRINGFIELD ARMORY, SPRINGFIELD, MA

SLIDE, SEAR

SIZE D CODE IDENT NO. 19205 5351220

SCALE 4/1 UNIT WT. .02 SHEET 1 OF 1

DISTRIBUTION STATEMENT A
APPROVED FOR PUBLIC RELEASE, DISTRIBUTION IS UNLIMITED.

SMCAR FORM 68, 1 DEC 87(TEMP), REPLACES SMCAR FORM 68, 1 MAR 87(TEMP), WHICH MAY BE USED UNTIL EXHAUSTED

Slide, Sear.c4